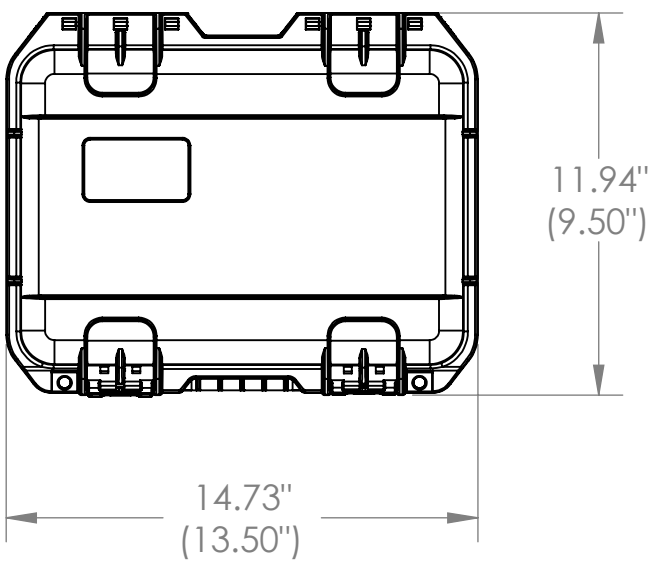

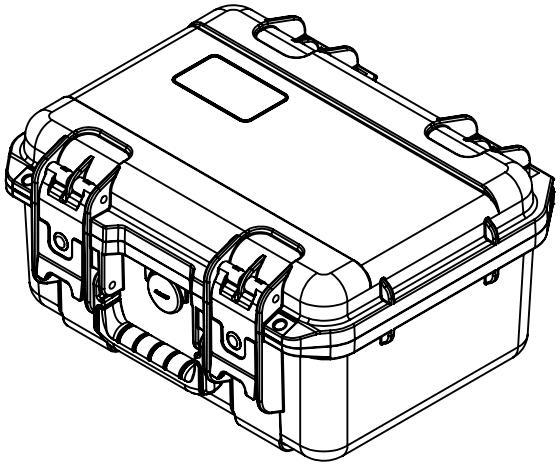

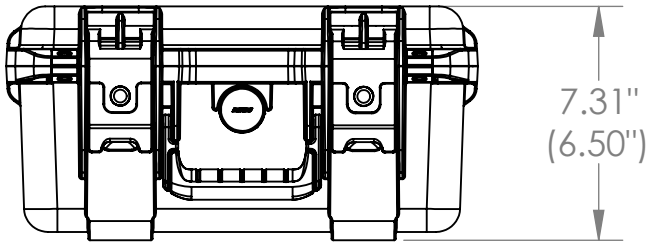

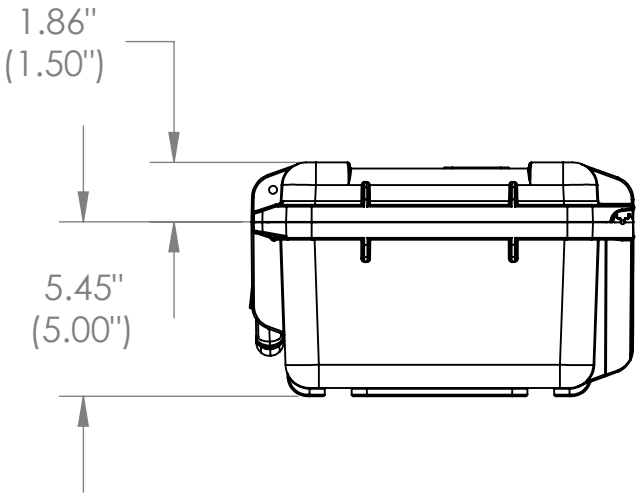

3i-1309-6

NOTE: DIMENSIONS IN (X.XX) ARE ID

434 West Levers Place
Orange, CA 92867
Phone: (714) 637-1252
Fax: (714) 637-0491
http://www.skbcases.com

Case Series:	3i Series	Dimensions (for reference only)			
Case part#	3i-1309-6		Length	Width	Overall	Base / Lid
			left to right	front to back	height	height
Weight:		Exterior	14.73"	11.94"	7.31"	5.45"/1.86"
		Inerior	13.50"	9.50"	6.50"	5.00"/1.50"

5 4 3 2 1